Physical Communication 52 (2022) 101699

Contents lists available at ScienceDirect

Physical Communication

journal homepage: www.elsevier.com/locate/phycom

Full length article

Delay-Doppler domain decision feedback turbo equalization for OTFS modulation☆

Yang Zhang [a,b], Qunfei Zhang [a], Chengbing He [a,b,*], Yi Zhou [a], Lianyou Jing [c]

[a] School of Marine Science and Technology, Northwestern Polytechnical University, Xi'an 710072, China
[b] Research and Development Institute, Northwestern Polytechnical University in Shenzhen, Shenzhen 518057, China
[c] School of Information and Communication Engineering, Dalian University of Technology, Dalian, 116024, China

ARTICLE INFO

Article history:
Received 22 April 2021
Received in revised form 12 February 2022
Accepted 21 March 2022
Available online 29 March 2022

Keywords:
OTFS
Delay-Doppler channels
Decision feedback equalization
Turbo equalization

ABSTRACT

Emerging evidence indicates that orthogonal time–frequency space (OTFS) modulation is a potential candidate modulation scheme for high mobility wireless communications. However, OTFS may experience significant inter-symbol interference (ISI) and inter-Doppler interference (IDI) in the receiver. In this paper, we propose a soft decision feedback turbo equalization for OTFS transmission over delay-Doppler channels to jointly combat both interferences. A novel block decision feedback equalization (BDFE) algorithm is constructed using the band feature of the channels in the delay-Doppler domain. The feedforward and feedback filters are designed by the delay-time channels coefficients. According to the designed filter, an equivalent system model is employed to allow turbo equalization. The posterior probability is established using the soft prior information and feedback filter, and then fed back to the channel decoder as external information. Both theoretical analysis and simulation results demonstrate the effectiveness of the proposed scheme in improving the bit error rate (BER) performance and combat various interference. Numerical simulations are finally provided to justify the validity of the proposed scheme in improving the bit error rate (BER) performance and combating various interference.

© 2022 Elsevier B.V. All rights reserved.

1. Introduction

The past few decades have seen an unprecedented rise in the application of underwater acoustic (UWA) communication as a potential technology in underwater scenarios, including environmental monitoring, sensor networks, autonomous underwater vehicle, etc. [1]. Supporting reliable communications in high mobility scenarios is one essential challenge for these applications. However, conventional Orthogonal Frequency Division Multiplexing (OFDM) potentially experiences severe inter-carrier interference caused by nonuniform Doppler shifts for all subcarriers in high-mobility scenarios, which suffers from severe degradation in a rapidly varying channel [2]. Recently, orthogonal time–frequency space (OTFS) modulation, a novel two-dimensional modulation scheme, has been proposed as a promising solution for high mobility communications [3–5].

Compared to the conventional multicarrier techniques such as OFDM, OTFS modulation achieves superior bit error rate (BER) performance, especially in high-speed mobile wireless communication scenarios. OTFS effectively transforms a time-varying fading channel into a non-fading and time-independent channel in the delay-Doppler domain, in which the channel gain essentially remains constant for all modulation symbols [5]. Notably, the OTFS received signal still experiences symbol interference and Doppler interference in the delay-Doppler domain [6]. Therefore, effectively eliminating or suppressing the effect of these interferences at the receiver remains to be explored.

Studies have proposed a low-complexity efficient message passing (MP) algorithm for joint interference cancellation (IC) and detection for low-complexity symbol detection, which takes advantage of the inherent delay-Doppler channel sparsity [6,7]. Several improved algorithms were also proposed according to the MP in complexity and bit error performance, including approximate message passing, variational Bayes detector, generalized approximate message passing, etc [8–11]. However, there remains the challenge of adapting the above algorithms to the complex time-varying channel, which is highly complex and is severely degraded due to improper Gaussian noise distribution. As such, an OTFS equalization scheme based on Markov chain Monte Carlo (MCMC) sampling with higher computational complexity than

☆ This work was supported by the National Natural Science Foundation of China under Grant 62071383, 61801079 and 61771396, and the Science Technology and Innovation Commission of Shenzhen Municipality (Grant No. JCYJ20180306170932431).

* Corresponding author at: School of Marine Science and Technology, Northwestern Polytechnical University, Xi'an 710072, China.
E-mail address: hcb@nwpu.edu.cn (C. He).

https://doi.org/10.1016/j.phycom.2022.101699
1874-4907/© 2022 Elsevier B.V. All rights reserved.

MP has been proposed [12]. In general, the above nonlinear algorithm has an iterative structure and high complexity.

Nowadays, several linear equalization schemes assume that the transmit and receive pulse waveforms satisfy biorthogonality in the ideal state; as such, inter-symbol interference and inter-carrier interference are ideally eliminated [13,14]. However, the ideal waveform cannot be applied practically, where the inevitable introduction of ISI and ICI drives non-uniform channel gains in the delay-Doppler domain, subsequently hindering the implementation of practical OTFS systems [15]. Considering the practical rectangular transmission waveform, the channel matrix lacks the block-circulant feature [16]. Moreover, the direct matrix inversion is inevitable, causing excessively high complex LMMSE equalization algorithm [17]. Elsewhere, a low complexity linear minimum means square error (LMMSE) algorithm was proposed based on the characteristics of the equivalent channel matrix in the delay-Doppler domain [18]. Studies have also proposed a low complexity iterative equalization design for the coded OTFS system but the equalizer exhibit suboptimal performance [19,20]. Furthermore, a novel scheme proposes a two-dimensional adaptive multichannel decision feedback equalizer for OTFS systems to combat different interferences [21].

In summary, conventional linear algorithms are characterized by suboptimal performance and higher complexity. While the conventional MP algorithm is difficult to find the optimal damping factor, relying on the bulky Monte Carlo simulations to find the appropriate damping factor. To this end, we, herein, construct a novel BDFE turbo receiver architecture to effectively mitigate IDI and ISI for OTFS system over delay-Doppler channels. According to the simulation results, the proposed BDFE algorithm outperforms the conventional LMMSE algorithm. Also, the iterative turbo equalization scheme substantially improves the OTFS system performance. The main contributions of this paper are presented as follows:

- A block decision feedback equalization scheme is designed using the band structure of the channel matrix in the delay-time domain, which relies on the LDL^H factorization to reduce complexity. The BDFE, which consists of a forward filter and a feedback filter, achieves successive soft interference cancellations from ISI and IDI. The feedback filters are used to eliminate the residual IC from the adjacent subblock matrix on both sides.
- An iterative coded OTFS system is proposed. In particular, an equivalent system model is derived based on the mentioned decision feedback equalization for the turbo OTFS scheme. The BDFE coefficients are updated according to the a priori information and channel coefficients. To compare the existing coded OTFS scheme [19,20], the iterative coded OTFS scheme is presented through the exchange of a priori information between the equalizer and the channel decoder, and its performance was effectively evaluated.

The rest of the paper is organized as follows. Section 2 presents a brief description of the coded OTFS system model and analyzes the composite channel matrix in the delay-Doppler domain and the delay-time domain. Section 3 presents a decision feedback turbo equalization scheme for the OTFS system in the receiver, and the proposed scheme is evaluated by numerical simulations in Section 4. Conclusions are drawn in Section 5.

Notations: lowercase and uppercase boldface letters donate vectors and matrices, respectively. The superscripts T and H denote the matrix transpose and the matrix Hermitian, respectively, and $\mathbf{I}_{NM}$ is $NM \times NM$ the identity matrix. diag($\mathbf{x}$) is a diagonal matrix with the elements of vector $\mathbf{x}$. The set of $N \times M$ dimensional matrices with complex entries are denoted by $\mathbb{C}^{N\times M}$. Moreover, we employ $\mathbb{E}[\cdot]$ stands for the statistical expectation, the complex Gaussian distribution with mean μ and variance σ^2 is denoted by $\mathcal{CN}(\mu, \sigma^2)$.

2. System model

This section briefly introduces the coded OTFS concepts and the system model (shown in Fig. 1). At the OTFS transmitter, the $L = T_{\text{bit}}KR_c$ input bits $\{\mathbf{d}_i\}_{i=1}^{L}$ are first encoded by the channel encoder, where $T_{\text{bit}} = \log_2 Q$, Q denotes the size of the modulation constellation set, R_c denotes code rate, and K represents the number of transmitted symbols per frame. To generate an interleaved coded stream $\mathbf{c}_i = \Pi(\mathbf{b}_i)$, the encoded bits $\{\mathbf{b}_i\}_{i=1}^{2L}$ are interleaved using a random interleaver, where $\Pi(\cdot)$ is the interleaving operator. Next, the interleaved coded bits $\{\mathbf{c}_i\}_{i=1}^{T_{\text{bit}}K}$ are mapped to complex symbols $\mathbf{x} \in \mathbb{C}^{K\times 1}$ from a finite constellation set $\mathbb{A} = \{a_1, \ldots, a_Q\}$ (e.g. QPSK symbols), and $\mathbf{x}$ are independently and identically distributed (i.i.d.) with unit power, i.e., $\sigma_{\mathbf{x}}^2 = 1$. Subsequently, the symbol vector $\mathbf{x}$ is rearranged into a two-dimensional transmitted signal $x[k, l]$ in delay-Doppler domain, where $k = 0, \ldots, N-1$, $l = 0, \ldots, M-1$, M and N denote the delay dimensions and Doppler dimensions, respectively.

2.1. Transmitted signal

To realize signal transmission over the wireless channel, the transmitted symbols mapped on the two-dimensional delay-Doppler grid are converted into the frequency domain. The inverse symplectic Fourier transform (ISFFT) is particularly used to transform the signal in the frequency domain, as shown [6]

$$X[n, m] = \frac{1}{\sqrt{NM}} \sum_{k=0}^{N-1} \sum_{l=0}^{M-1} x[k, l] e^{j2\pi(\frac{nk}{N} - \frac{ml}{M})}. \tag{1}$$

Next, the frequency domain signal is converted to a continuous-time domain signal $s(t)$ via the Heisenberg transform. Notably, this paper utilizes the practical rectangular pulse $g_{tx}(t)$, expressed as

$$s(t) = \sum_{n=0}^{N-1} \sum_{m=0}^{M-1} X[n, m] g_{tx}(t - nT) e^{j2\pi m\Delta f(t-nT)}, \tag{2}$$

where Δf is subcarrier spacing and $T = 1/\Delta f$ is the symbol duration.

2.2. Channel model and received signal

The signal $s(t)$ is transmitted over a time-varying channel with complex baseband channel impulse response $h(\tau, \upsilon)$, where τ and υ denote the delay shift and Doppler shift of the corresponding channel gain, respectively . The received signal $r(t)$ is expressed as

$$r(t) = \iint h(\tau, \nu) s(t - \tau) e^{j2\pi\nu(t-\tau)} d\nu d\tau + z(t), \tag{3}$$

where $z(t)$ denotes an additive white Gaussian noise term with zero mean and variance σ^2 at the receiver. $h(\tau, \upsilon)$ is the delay-Doppler channel impulse response expressed as

$$h(\tau, \nu) = \sum_{i=1}^{P} h_i \delta(\tau - \tau_i) \delta(\nu - \nu_i), \tag{4}$$

where P denotes the number of propagation paths; h_i, τ_i, and υ_i denote the complex channel gain, delay, and Doppler frequency associated with the ith path, respectively. In this view, the corresponding delay shift and Doppler frequency shift of each path are expressed as

$$\tau_i = \frac{l_i}{M\Delta f}, \qquad \nu_i = \frac{k_i}{NT}, \tag{5}$$

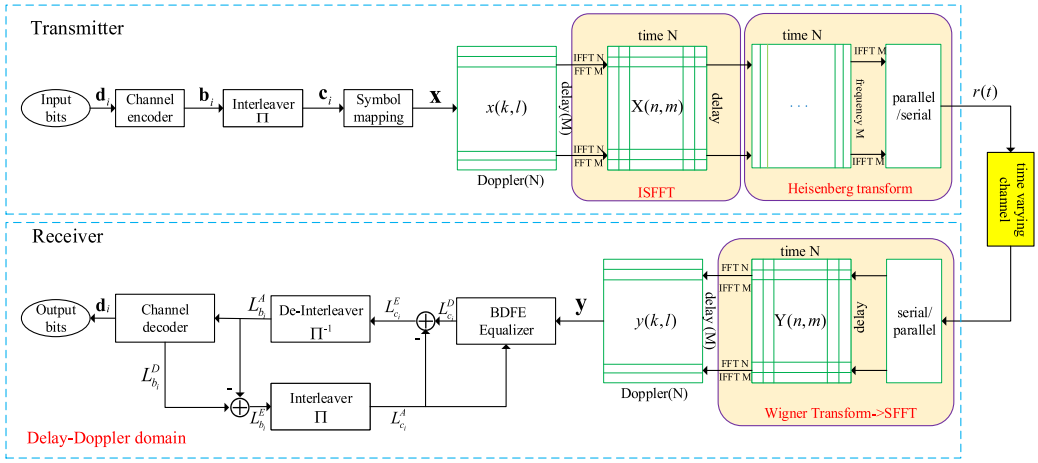

Fig. 1. Block diagram of the proposed OTFS scheme with turbo equalization.

where l_i and k_i are the delay index and Doppler index of the ith path, respectively; $M\Delta f$ denotes the total bandwidth of the system; NT represents the duration of an OTFS frame. For ease of derivations, it is assumed that the delay and Doppler shifts as integer multiples of $\frac{1}{M\Delta f}$ and $\frac{1}{NT}$, respectively.

At the receiver, the time-domain signal $r(t)$ is transformed into a time–frequency signal $Y[n, m]$ using the Wigner transform, expressed as

$$A_{g_{rx,r}}(t,f) = \int g^*_{rx}(t'-t)\, r(t')\, e^{-j2\pi f(t'-t)} dt' \tag{6}$$

$$Y[n,m] = A_{g_{rx,r}}(t,f)\big|_{t=nT, f=m\Delta f} \tag{7}$$

The input and output relationship of OTFS in the time–frequency domain is expressed as

$$\begin{aligned} Y[n,m] &= H_{n,m}[n,m]X[n,m] \\ &+ \sum_{m'=0, m'\neq m}^{M-1} H_{n,m}[n,m']X[n,m'] \\ &+ \sum_{m'=0}^{M-1} H_{n,m}[n-1,m']X[n-1,m'], \end{aligned} \tag{8}$$

where $H_{n,m}[n,m]$ is given by

$$H_{n,m}[n,m] = \int_\tau \int_\nu h(\tau,\nu) e^{j2\pi\nu nT} e^{-j2\pi(\nu+m\Delta f)\tau} d\nu d\tau. \tag{9}$$

Next, the output signal $Y[n, m]$ is converted to signal $y[k, l]$ in the delay-Doppler domain using Symplectic Finite Fourier transform (SFFT), expressed as

$$y[k,l] = \frac{1}{\sqrt{NM}} \sum_{n=0}^{N-1}\sum_{m=0}^{M-1} Y[n,m] e^{-j2\pi\left(\frac{nk}{N}-\frac{ml}{M}\right)}. \tag{10}$$

The above section describes the specific process for OTFS modulation. The next section presents an explicit input–output relationship and analyzes the characteristics of the composite matrix in different domains.

2.3. The equivalent channel matrix in delay-doppler domain

In this part, the OTFS modulation process described above is integrated in order to efficiently utilize the channel matrix structure in the delay-Doppler domain, which promotes a low-complexity decision feedback equalization to eliminate related interferences in the received signal. The input–output relationship in the delay-Doppler domain can be expressed as [6]

$$y[k,l] = \sum_{i=1}^{P} h_i e^{j2\pi\left(\frac{l-l_i}{M}\right)\frac{k_i}{N}} \beta_i(k,l) x[[k-k_i]_N, [l-l_i]_M] + z[k,l] \tag{11}$$

where

$$\beta_i(k,l) = \begin{cases} 1 & l_i \le l < M \\ \frac{N-1}{N} e^{-j2\pi\left(\frac{[k-k_i]_N}{N}\right)} & 0 \le l < l_i \end{cases},$$

where $z[k, l]$ term is the noise term after demodulation. $[\cdot]_N$ and $[\cdot]_M$ denote modulo N and M operations, respectively.

As described previously (11), each received signal is the cumulative sum of different paths, whereas, for each path, the transmitted signal is cyclically shifted in different dimensions and scaled by the corresponding proportional channel gain. To differentiate with the basic OTFS scheme [6], we refer to the above scheme including placing some null symbols (zero-padding (ZP)) as the ZP-OTFS in the delay-Doppler domain. Our main motivation is to design a low complexity detector for OTFS by adding the delay-Doppler domain ZP. The ZP-OTFS delay-Doppler domain discrete system can be expressed in the matrix form as

$$\mathbf{y} = \mathbf{H}\mathbf{x} + \mathbf{z}, \tag{12}$$

where $\mathbf{y}$ and $\mathbf{z}$ denote complex vectors of dimension $NM \times 1$ with elements from $y[k, l]$ and $z[k, l]$, respectively. $\mathbf{H}$ denotes an $NM \times NM$ effective channel matrix whose elements are determined from (11). $\mathbf{x}$ denotes the transmitted vector of dimension $NM \times 1$ with elements $x_i \in \mathbb{A}$, $1 \le i \le NM$.

As for OTFS signal detection [13,18], with the knowledge of the channel matrix, the conventional LMMSE equalization algorithm is expressed as

$$\begin{aligned} \hat{\mathbf{x}} &= \mathbf{H}^H \left(\mathbf{H}\mathbf{H}^H + \sigma^2 \mathbf{I}_{NM}\right)^{-1} \mathbf{y} \\ &= \left(\sigma^2 \mathbf{I}_{NM} + \mathbf{H}^H\mathbf{H}\right)^{-1} \mathbf{H}^H \mathbf{y}, \end{aligned} \tag{13}$$

where $\hat{\mathbf{x}}$ denotes the recovered received symbol.

As such, the complexity of the LMMSE mainly is ascribed to the inversion of the dominant matrix, exhibiting extremely high complexity $\mathcal{O}(N^3M^3)$ due to the cubic in frame length NM. However, the direct matrix inversion of LMMSE does not employ the characteristics of the channel matrix $\mathbf{H}$.

Next, the structure of the equivalent channel matrix $\mathbf{H}$ in the delay-Doppler domain, with a block-lower-triangular structure, is analyzed in Fig. 2. In [20], we can further transform the delay-Doppler domain channel matrix $\mathbf{H}$ into the delay-time domain

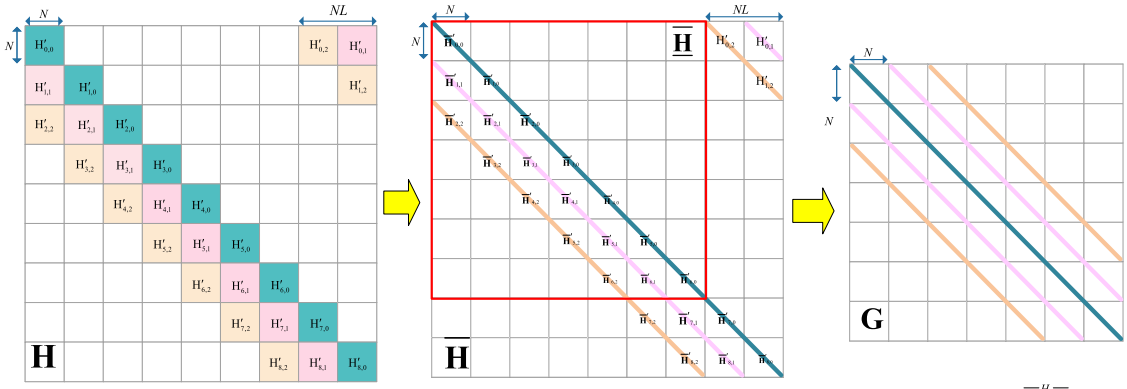

(a) Delay -Doppler domain (b) Delay-Time Domain (c) $\mathbf{G} = (\sigma^2 \mathbf{I}_{\underline{M}N} + \underline{\overline{\mathbf{H}}}^H \underline{\overline{\mathbf{H}}})$

Fig. 2. Structure of $\mathbf{H}$, $\overline{\mathbf{H}}$, $\underline{\overline{\mathbf{H}}}$ and $\mathbf{G}$, with $M = 9$, $N = 4$ and $L = 2$. (a) Structure of $\mathbf{H}$. (b) Structures of $\overline{\mathbf{H}}$. (c) Structures of $\mathbf{G}$.

channel matrix $\overline{\mathbf{H}}$ by replacing the subblock matrix. Specifically, the subblock matrix in $\mathbf{H}$ can be diagonalized in the corresponding Fourier transform (delay-time domain), resulting in $\overline{\mathbf{H}}$ being a diagonal-block-banded matrix as shown in Fig. 2(b). Therefore, ZP OTFS delay-time domain discrete system can be written in the matrix form as

$$\overline{\mathbf{y}} = \overline{\mathbf{H}}\overline{\mathbf{x}} + \overline{\mathbf{z}}, \tag{14}$$

where

$$\begin{aligned} \overline{\mathbf{y}} &= (\mathbf{I}_M \otimes \mathbf{F}_N^H)\mathbf{y} \\ \overline{\mathbf{x}} &= (\mathbf{I}_M \otimes \mathbf{F}_N^H)\mathbf{x} \\ \overline{\mathbf{H}} &= (\mathbf{I}_M \otimes \mathbf{F}_N^H)\mathbf{H}(\mathbf{I}_M \otimes \mathbf{F}_N), \end{aligned} \tag{15}$$

where $\overline{\mathbf{z}} = (\mathbf{I}_M \otimes \mathbf{F}_N^H)\mathbf{z}$ is the corresponding noise vector. In this domain, $\overline{\mathbf{H}}$ is observed as a diagonal-block-banded matrix with a bandwidth equal to $N(L+1)$, where L denotes the maximum delay spread. Notably, $\overline{\mathbf{H}}$ is a sparse matrix whose sparsity $\overline{L}/N$ is less than or equal to the sparsity P/N of $\mathbf{H}$, where $\overline{L}$ is the number of unique delay taps and P is the total number of propagation paths. $\mathbf{H}'_{m,l} \in \mathbb{C}^{N\times N}$ and $\overline{\mathbf{H}}'_{m,l} \in \mathbb{C}^{N\times N}$ are the subblock matrices of $\mathbf{H}$ and $\overline{\mathbf{H}}$ respectively, which are given in [20]. For special channel matrix features, it motivates us to focus on designing an effective and low-complexity equalizer for OTFS system.

3. Decision feedback turbo equalization for OTFS systems

In this section, a soft decision feedback turbo equalization algorithm is proposed for OTFS transmissions over delay-Doppler channels. First, a block decision feedback equalizer is designed, which has low complexity and can effectively improve the OTFS system performance. To further improve the performance gain, a turbo equalization is designed according to the above decision feedback equalizer for the coded OTFS system.

3.1. Block decision feedback equalizer design

A block decision feedback equalization is designed using the banded characteristics of the delay-time channel matrix, and the complexity is reduced by substituting the direct matrix inversion with a band LDL^H factorization. Fig. 3 shows the block diagram of the BDFE. To develop the scheme, we place guard zero padding in the delay-Doppler domain to remove unwanted corners, so as to guarantee that $\overline{\mathbf{H}}$ has a standard block-banded structure in the delay-time domain. Here we set the trailing L vectors of the transmitted symbol $\mathbf{x}$ to zero vectors, i.e.,

$$\mathbf{x} = [\underline{\mathbf{x}}^T,\ \mathbf{0}_{1\times NL}]^T, \tag{16}$$

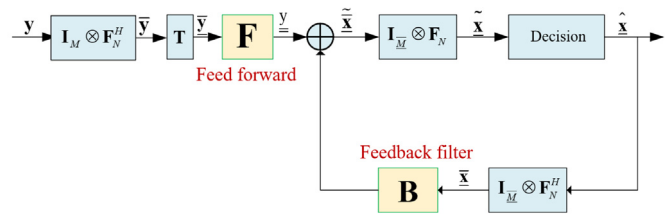

Fig. 3. Block diagram of the block decision feedback Equalization.

where $\underline{\mathbf{x}}$ denotes the payload part of the transmitted frame in the delay-Doppler domain. By defining the matrix $\mathbf{T} = [\mathbf{I}_{NM}]_{0:(M-L)N-1,:}$, $\underline{\mathbf{x}}$ can be expressed as $\underline{\mathbf{x}} = \mathbf{T}\mathbf{x}$.

For block decision feedback equalization, the OTFS demodulated block in (14) is similarly truncated by $\mathbf{T}$, and has the form

$$\underline{\overline{\mathbf{y}}} = \underline{\overline{\mathbf{H}}}\,\underline{\overline{\mathbf{x}}} + \underline{\overline{\mathbf{z}}}, \tag{17}$$

where $\underline{\overline{\mathbf{y}}} = \mathbf{T}\overline{\mathbf{y}}$, $\underline{\overline{\mathbf{z}}} = \mathbf{T}\overline{\mathbf{z}}$, and $\underline{\overline{\mathbf{H}}} = \mathbf{T}\overline{\mathbf{H}}$ is the $\underline{\overline{M}}N \times \underline{\overline{M}}N$ submatrix [see Fig. 2(c)], where $\underline{\overline{M}} = M - L$. By eliminating the top-right corners of $\overline{\mathbf{H}}$, the remaining matrix $\underline{\overline{\mathbf{H}}}$ typically has a standard diagonal-block-banded structure. Here, the feedforward filter $\mathbf{F} \in \mathbb{C}^{NM\times NM}$, and a strict upper triangular feedback filter $\mathbf{B} \in \mathbb{C}^{NM\times NM}$, which can be designed by the delay-time channel matrix $\underline{\overline{\mathbf{H}}}$ in the OTFS system, are defined. The specific process is given as follows.

With the standard assumption of correct decision feedback, that is, $\underline{\tilde{\overline{\mathbf{x}}}} = \underline{\overline{\mathbf{x}}}$, therefore, the error vector can be expressed as

$$\mathbf{e} = \mathbf{F}\underline{\overline{\mathbf{y}}} - (\mathbf{B} + \mathbf{I}_{N\underline{\overline{M}}})\underline{\overline{\mathbf{x}}}. \tag{18}$$

Next, according to the principle of orthogonality, $\mathbb{E}[\mathbf{e}\underline{\overline{\mathbf{y}}}] = \mathbf{0}_{N\underline{\overline{M}}\times N\underline{\overline{M}}}$ using the minimum mean square error, the following results are obtained

$$\mathbf{F} = \left(\mathbf{B} + \mathbf{I}_{N\underline{\overline{M}}}\right)\underline{\overline{\mathbf{H}}}^H\left(\underline{\overline{\mathbf{H}}}\,\underline{\overline{\mathbf{H}}}^H + \sigma^2\mathbf{I}_{N\underline{\overline{M}}}\right)^{-1}. \tag{19}$$

For the feedback filter $\mathbf{B}$, the covariance matrix $\mathbf{R}_{\mathbf{ee}} = \mathbb{E}[\mathbf{e}\mathbf{e}^H]$ can be expressed as

$$\mathbf{R}_{\mathbf{ee}} = (\mathbf{B} + \mathbf{I}_{N\underline{\overline{M}}})(\mathbf{R}_{\underline{\overline{\mathbf{x}}}\underline{\overline{\mathbf{x}}}} - \mathbf{R}_{\underline{\overline{\mathbf{x}}}\underline{\overline{\mathbf{y}}}}\mathbf{R}_{\underline{\overline{\mathbf{y}}}\underline{\overline{\mathbf{y}}}}^{-1}\mathbf{R}_{\underline{\overline{\mathbf{x}}}\underline{\overline{\mathbf{y}}}}^H)(\mathbf{B} + \mathbf{I}_{N\underline{\overline{M}}})^H, \tag{20}$$

where $\mathbf{R}_{\underline{\overline{\mathbf{x}}}\underline{\overline{\mathbf{x}}}} = \mathbb{E}[\underline{\overline{\mathbf{x}}}\,\underline{\overline{\mathbf{x}}}^H]$, $\mathbf{R}_{\underline{\overline{\mathbf{x}}}\underline{\overline{\mathbf{y}}}} = \mathbb{E}[\underline{\overline{\mathbf{x}}}\,\underline{\overline{\mathbf{y}}}^H]$, and $\mathbf{R}_{\underline{\overline{\mathbf{y}}}\underline{\overline{\mathbf{y}}}} = \mathbb{E}[\underline{\overline{\mathbf{y}}}\,\underline{\overline{\mathbf{y}}}^H]$.

Further, (20) is computed according to the matrix inverse theorem, with the following formulation

$$\mathbf{R}_{\mathbf{ee}} = (\mathbf{B} + \mathbf{I}_{N\underline{\overline{M}}})(\sigma^2\mathbf{I}_{N\underline{\overline{M}}} + \underline{\overline{\mathbf{H}}}^H\underline{\overline{\mathbf{H}}})^{-1}(\mathbf{B} + \mathbf{I}_{N\underline{\overline{M}}})^H. \tag{21}$$

Algorithm 1 Block LDL^H Factorization

Input: The diagonal-block-banded matrix $\mathbf{G}$, $\mathbf{L} = \mathbf{0}_{\underline{M}N}$, $\mathbf{D} = \mathbf{0}_{\underline{M}N}$, maximum delay spread L.

Initialization: $\mathbf{G}_{m,m'}$, $\mathbf{L}_{m,m'}$, and $\mathbf{D}_{m,m'}$ are the (m, m')th blocks of $\mathbf{G}$, $\mathbf{L}$ and $\mathbf{D}$, respectively. The blocks $\mathbf{L}_{0,0} = \mathbf{I}_N$ and $\mathbf{D}_{0,0} = \mathbf{G}_{0,0}$.

for $m = 1 : \underline{M} - 1$ **do**

  Enforce the identity-block constraint: $\mathbf{L}_{m,m} = \mathbf{I}_N$.

  for $m' = m - L : m - 1$ **do**

    Compute the nonzero blocks in $\mathbf{L}$:

    $\mathbf{L}_{m,m'} = (\mathbf{G}_{m,m'} - \sum_{i=m-L}^{m'-1} \mathbf{L}_{m,i}\mathbf{D}_{i,i}\mathbf{L}_{m',i}^H)\mathbf{D}_{m',m'}^{-1}$.

  end for

  Compute the block on the main diagonal of $\mathbf{D}$:

  $\mathbf{D}_{m,m} = \mathbf{G}_{m,m} - \sum_{i=m-L}^{m-1} \mathbf{L}_{m,i}\mathbf{D}_{i,i}\mathbf{L}_{m,i}^H$.

end for

Output: $\mathbf{L}$ and $\mathbf{D}$.

The computational complexity is reduced by LDL^H factorization instead of matrix inversion, the band LDL^H factorization algorithm is described in Algorithm 1 [22]

$$\mathbf{G} = \sigma^2\mathbf{I}_{N\underline{M}} + \underline{\overline{\mathbf{H}}}^H\underline{\overline{\mathbf{H}}} = \mathbf{LDL}^H. \tag{22}$$

Hence, by simply minimizing the covariance matrix $\mathrm{tr}(\mathbf{R_{ee}}) = \mathbb{E}[\|e\|^2]$ based on the minimum mean square error, i.e., find a diagonal matrix $\mathbf{R_{ee}}$ such that $\mathrm{tr}(\mathbf{R_{ee}})$ is minimized.

$$\mathbf{B} = \mathbf{L}^H - \mathbf{I}_{N\underline{M}}. \tag{23}$$

By (19), (22), and (23), we obtain

$$\mathbf{F} = \mathbf{L}^H\mathbf{G}^{-1}\underline{\overline{\mathbf{H}}}^H = \mathbf{D}^{-1}\mathbf{L}^{-1}\underline{\overline{\mathbf{H}}}^H, \tag{24}$$

where $\mathbf{L}$ denotes a unit lower triangular and banded matrix, and $\mathbf{D}$ is a diagonal matrix.

For symbol decision processing, a posteriori soft decision is adopted based on successive cancellations to reduce propagation errors achieving better performance than hard decisions. Besides the solution of the posterior probability is a prerequisite to realize the turbo equalization scheme below.

The output of the filter being given in (18), (23) and (24) is considered to calculate the posterior probability of the corresponding symbol. The OTFS system described in (12) can be efficiently converted to an equivalent system as follows

$$\underline{\underline{\mathbf{y}}} = \mathbf{F}\underline{\overline{\mathbf{y}}} = \underline{\underline{\mathbf{H}}}\,\underline{\overline{\mathbf{x}}} + \underline{\underline{\mathbf{z}}}, \tag{25}$$

where $\underline{\underline{\mathbf{H}}} = \mathbf{B} + \mathbf{I}_{N\underline{M}}$ denote the equivalent channel matrix; $\underline{\underline{\mathbf{z}}}$ denote the equivalent noise with zero mean and covariance matrix $\boldsymbol{\Phi}_{\underline{\underline{\mathbf{z}}}} = \boldsymbol{\Delta}^{-1} = \mathrm{diag}[\sigma_1^2, \ldots, \sigma_{\underline{M}N}^2]$; $1/\sigma_i^2$ represent the ith diagonal element of $\mathbf{D}$. The corresponding posterior probability of each symbol is expressed as

$$P(\underline{\overline{x}}_i|\underline{\underline{\mathbf{y}}}) = \frac{P(\underline{\underline{\mathbf{y}}}|\underline{\overline{x}}_i)P(\underline{\overline{x}}_i)}{P(\underline{\underline{\mathbf{y}}})}. \tag{26}$$

Here, $\underline{\underline{\mathbf{z}}}$ is assumed to follows a complex Gaussian distribution, and the prior probability of symbol $\underline{\overline{\mathbf{x}}}$ can be approximated as

$$P(\underline{\underline{\mathbf{y}}}|\underline{\overline{x}}_i) = \frac{1}{\pi\sigma_i^2}\exp\left(-\frac{\left|\rho(\underline{\overline{x}}_i)\right|^2}{\sigma_i^2}\right). \tag{27}$$

From (26) and (27), the posterior probability of the symbol $\underline{\overline{x}}_i$ is rewritten as follows

$$P(\underline{\overline{x}}_i|\underline{\underline{\mathbf{y}}}) = \frac{P(\underline{\overline{x}}_i)}{P(\underline{\underline{\mathbf{y}}})}\frac{1}{\pi\sigma_i^2}\exp\left(-\frac{\left|\rho(\underline{\overline{x}}_i)\right|^2}{\sigma_i^2}\right). \tag{28}$$

where $P\left(\underline{\overline{x}}_i\right) = 1/Q$ represent the symbol a priori probability, assuming that all transmitted symbols $a_q \in \mathbb{A}$ are equally likely, and the value of $P(\underline{\underline{\mathrm{y}}})$ can be calculated using the normalized constant $\sum_{q=1}^{Q} P\left(x_i = a_q|\underline{\underline{\mathrm{y}}}\right) = 1$. The values of $\rho(\underline{\overline{x}}_i)$ are given as

$$\rho(\underline{\overline{x}}_i) = \underline{\underline{y}}_i - \underline{\underline{h}}_{i,i}\underline{\overline{x}}_i - \sum_{l=i+1}^{NL}\underline{\underline{h}}_{i,l}\underline{\widehat{\overline{x}}}_{l+N}, \tag{29}$$

where $\underline{\underline{h}}_{i,l}$ denote the element in the ith row and lth column of the equivalent channel matrix $\underline{\underline{\mathbf{H}}}$, and then, due to the equivalent conversion, the symbol posterior probability $P(\underline{\overline{x}}_i|\underline{\underline{\mathbf{y}}})$ in (28) is replaced by a posteriori probability $P(\underline{\overline{x}}_i|\underline{\overline{\mathbf{y}}})$.

The ith element of posterior soft estimation symbol $\underline{\widetilde{\overline{\mathbf{x}}}}$ can be derived from the posterior mean and probability of the corresponding symbol, expressed as

$$\underline{\widetilde{\overline{x}}}_i = \sum_{q=1}^{Q} P(\underline{\overline{x}}_i = a_q|\underline{\overline{\mathbf{y}}})a_q, \tag{30}$$

where $a_q \in \mathbb{A}$ denotes the modulation alphabet and $P(\underline{\overline{x}}_i = a_q|\underline{\overline{\mathbf{y}}})$ denotes the posterior probability of receiving symbols in the delay-time domain.

Next, $\underline{\widetilde{\overline{\mathbf{x}}}}$ is transformed into $\underline{\widetilde{\mathbf{x}}}$ in the delay-Doppler domain as

$$\underline{\widetilde{\mathbf{x}}} = (\mathbf{I}_{\underline{M}} \otimes \mathbf{F}_N)\underline{\widetilde{\overline{\mathbf{x}}}}. \tag{31}$$

Lastly, $\underline{\widetilde{\mathbf{x}}}$ is decided to recover the corresponding transmitted symbol $\underline{\widehat{\mathbf{x}}}$.

3.2. Iterative decision feedback turbo equalization

According to turbo equalization, the coded OTFS scheme is inspired by the above-mentioned soft symbol posterior probability of decision feedback. Moreover, the interference in the received signal is eliminated using the soft information from the channel decoder. In this section, turbo equalization is designed based on the decision feedback algorithm proposed above for OTFS systems, which is described as follows.

A prior estimation symbol $\bar{x}_i$ and variance $\sigma_{x_i}^2$ of two-dimensional transmitted symbol in the delay-Doppler domain are calculated as follows

$$\bar{x}_i = \mathbb{E}[x_i] = \sum_{q=1}^{Q} a_q P(x_i = a_q) \tag{32}$$

$$\sigma_{x_i}^2 = \sum_{q=1}^{Q}(a_q - \bar{x}_i)^2 P(x_i = a_q), \tag{33}$$

where $P(x_i = a_q)$ denote the symbol prior probability, calculated on the basis of the a priori LLRs $L_{i,c}^{A,j}$ delivered by the channel decoder, the LLRs are initialized as $L_{i,c}^{A,j} = 0$ in the first iteration, where j denotes the iteration count. Here, reliability information of the coded bits is iteratively exchanged between the detector and the channel decoder, as [23]

$$P(x_i = a_q) = \frac{1}{2}(1 + (2q - 1)\tanh(\frac{1}{2}L_{i,c}^{A,j})). \tag{34}$$

For the coded OTFS turbo equalization, the prior information of x_i needs to be updated for each iteration. As such, a prior mean

$\bar{\mathbf{x}}_j$ and prior covariance $\boldsymbol{\Phi}_j$ are defined as

$$\bar{\mathbf{x}}_j = [\bar{x}_1, \ldots, \bar{x}_{n-1}, 0, \bar{x}_{n+1}, \ldots, \bar{x}_{N\underline{M}}]^T \tag{35}$$

$$\boldsymbol{\Phi}_j = \mathrm{diag}[\sigma^2_{x_1}, \ldots, \sigma^2_{x_{N\underline{M}}}, \ldots, \sigma^2_{x_{N\underline{M}}}]. \tag{36}$$

Notably, during iterative equalization, the symbol x_i itself is set to have zero prior information to avoid positive feedback leading to system instability.

According to turbo equalization, the two-dimensional filter matrix design is described as [24]

$$\mathbf{F}_j = \mathbf{L}_j \boldsymbol{\Phi}_j \underline{\overline{\mathbf{H}}}^H (\underline{\overline{\mathbf{H}}} \boldsymbol{\Phi}_j \underline{\overline{\mathbf{H}}}^H + \sigma^2 \mathbf{I}_{N\underline{M}})^{-1} \tag{37}$$

$$\mathbf{B}_j = \mathbf{L}_j - \mathbf{I}_{N\underline{M}}, \tag{38}$$

where $\mathbf{F}_j$ and $\mathbf{B}_j$ represent the two-dimensional forward matrix and feedback matrix of the jth iteration respectively, $\mathbf{L}_j$ represents an upper triangular matrix with unit diagonal elements, calculated from the LDL^H decomposition as follows

$$\boldsymbol{\Phi}_j^{-1} + \frac{1}{\sigma^2} \underline{\overline{\mathbf{H}}}^H \underline{\overline{\mathbf{H}}} == (\mathbf{L}_j)^H \mathbf{D}_j \mathbf{L}_j. \tag{39}$$

Based on the turbo equalization filter given in (37), the corresponding equivalent system is given as follows

$$\underline{\underline{\mathbf{y}}}_j = \mathbf{F}_j(\underline{\overline{\mathbf{y}}} - \underline{\overline{\mathbf{H}}}\bar{\mathbf{x}}_j) = \underline{\underline{\mathbf{H}}}_j(\underline{\bar{\mathbf{x}}} - \underline{\bar{\mathbf{x}}}_j) + \underline{\underline{\mathbf{z}}}_j, \tag{40}$$

where $\underline{\underline{\mathbf{z}}}_j$ denote the noise vector of the equivalent system $\underline{\underline{\mathbf{H}}}_j = \mathbf{B}_j + \mathbf{I}_{NM}$ during the equalization iteration.

The symbol posterior probability of the jth iteration for turbo equalization can be calculated based on the soft decision feedback design method mentioned above in (28) and (29) as follows

$$P(\underline{\bar{x}}_i | \underline{\underline{\mathbf{y}}}_j) = \frac{P(\underline{\bar{x}}_i)}{P(\underline{\underline{\mathbf{y}}}_j)} \left(\frac{\exp\left(\gamma_j(\underline{\bar{x}}_i)\right)}{\pi \sigma^2_{i,j}} \right), \tag{41}$$

where $\gamma_j(\underline{\bar{x}}_i)$ is defined as follows

$$\gamma_j(\underline{\bar{x}}_i) = -\frac{\left| \underline{\underline{\mathbf{y}}}_j - \underline{\underline{h}}^j_{i,l} \underline{\bar{x}}_{i,j} - \sum_{l=i+1}^{NL} \underline{\underline{h}}^j_{i,l} (\widehat{\underline{\bar{x}}}_{l+N,j} - \underline{\bar{x}}_{l+N,j}) \right|^2}{\sigma^2_{i,j}}, \tag{42}$$

where $\underline{\underline{h}}^j_{i,l}$ represents the element in the ith row and lth column of the equivalent channel matrix $\underline{\underline{\mathbf{H}}}_j$.

Next, we transform $\gamma_j(\underline{\bar{\mathbf{x}}})$ in the delay-time domain into $\gamma_j(\mathbf{x})$ in the delay-Doppler domain as

$$\gamma_j(\mathbf{x}) = (\mathbf{I}_M \otimes \mathbf{F}_N)\gamma_j(\underline{\bar{\mathbf{x}}}) \tag{43}$$

Further, the intrinsic log-likelihood ratios of the transmitted coded bits $x^j_{i,k}$ can be calculated as [25]

$$L^{D,j}_{i,c} = \ln \frac{\sum_{x_i \in a_q^{(0)}} \exp(\gamma_j(x_i) + \frac{1}{2} \sum_{\forall k': k' \neq k} \beta'_{i,k} L_A(x^j_{i,k}))}{\sum_{x_i \in a_q^{(1)}} \exp(\gamma_j(x_i) + \frac{1}{2} \sum_{\forall k': k' \neq k} \beta'_{i,k} L_A(x^j_{i,k}))}, \tag{44}$$

where $\beta_{i,k}$ denote the kth bit of the symbol vector corresponding to $a_q \in \mathbb{A}$, $\gamma_j(x_i)$ represents i elements of $\gamma_j(\mathbf{x})$, binary code bit $\beta'_{i,k}$ is defined as

$$\beta'_{i,k} = \begin{cases} +1, & \beta_{i,k} = 0 \\ -1, & \beta_{i,k} = 1 \end{cases} \tag{45}$$

Lastly, the external LLRs $L^{E,i}_{i,c}$ of the equalizer for the jth iteration is calculated as the jth iteration as follows

$$L^{E,j}_{i,c} = L^{D,j}_{i,c} - L^{A,j}_{i,c}, \tag{46}$$

where $L^{A,i}_{i,c}$ is the a priori LLR for the jth iteration.

Table 1
Computational complexity of different algorithms.

Algorithms	Complexity
BDFE	$(3\log_2 N + 8L^2 + 22L + 6)N\underline{M}$
MP [6]	$2^Q NM(5P^2 - 10P + 1)n_{iter}$
MRC [20]	$NM(P + 3L + 2\log_2(M) + 3)$
	$n_{iter} N\underline{M}(2L + 2\log_2(N) + 1)$
LMMSE	$3N^3M^3 + N^2M^2 + NM$

3.3. Complexity analysis

We now analyze the complexity of the proposed block decision feedback equalizer. Because the band LDL^H factorization algorithm is used for block equalization, the proposed BDFE requires $(3\log_2 N + 8L^2 + 22L + 6)N\underline{M}$ complex operations. More specifically, the block LDL^H factorization can thus use a banded algorithm as in Algorithm 1, which requires $(2L^2+L)N\underline{M}$ complex additions (CA), $(2L^2 + 3L)N\underline{M}$ complex multiplications (CM), and $(2L)N\underline{M}$ complex divisions (CD) [22]. Furthermore, (22) requires $(2L^2 + L + 1)N\underline{M}$ CA and $(2L^2 + 3L + 1)N\underline{M}$ CM. (23), (24), and (25) can be computed with $(6L)N\underline{M}$ CA, $(6L + 1)N\underline{M}$ CM, and $N\underline{M}$ CD. In addition, the proposed BDFE also needs extra complexity for domain transformation, which requires $(2\log_2 N)N\underline{M}$ CA, $(\log_2 N)N\underline{M}$ CM, and $2N\underline{M}$ CD. Notably, we follow an approximate linear solution due to the relatively small value of L. As a result, the proposed banded BDFE has lower complexity than the conventional LMMSE. Table 1 presents the overall complexity of the proposed equalization algorithm in terms of CAs, CMs and CDs. In particular, the computational complexity of the MP [6], MRC [20], and LMMSE methods are also provided in Table 1, where n_{iter} denotes the number of iterations.

4. Numerical simulations

In this section, the BER performance of the proposed iterative decision feedback equalization is evaluated for coded OTFS over delay-Doppler channels. Assuming the perfect channel information is known at the receiver. An underwater acoustic communication scenario is considered, where OTFS frames comprise $N = 16$ and $M = 64$ quaternary phase-shift keying (QPSK) symbols with a duration of $T = 256$ ms [22]. Therefore, the sampling period of each symbol is $T_s = T/(NM) = 0.25$ ms; carrier frequency is $f_c = 6$ kHz; the speed of sound is $c = 1500$ m/s.

It is assumed that the delay-Doppler channel is an independent Rayleigh fading channel tap with an exponentially normalized power delay profile $\frac{e^{(-0.1l_i)}}{\sum_i e^{(-0.1l_i)}}$. Specifically, when $P = 5$ paths, the maximum delay spread of the channel is set to $L = 24$, corresponding to a multipath delay spread of $\tau_{\max} = LT_s = 6$ ms. The moving speed is $v = 2$ m/s and the corresponding maximum Doppler frequency shift $k_{\max} = 2$. Each delay tap is assumed to have a single Doppler shift generated randomly by Jakes' formula $k_i = k_{\max}\cos(\theta_i)$, where θ_i is uniformly distributed over $[-\pi, \pi]$ [6,20]. As such, the Doppler index and delay index of each path is equal probability in $[-k_{\max}, k_{\max}]$ and $[0, L]$, respectively.

The performance of the proposed BDFE algorithm is evaluated with the conventional MP [6], maximal ratio combining (MRC) [20], and LMMSE. A comparison of OTFS BER performance with different algorithms and OFDM performance using a single-tap MMSE equalizer is depicted in Fig. 4. OTFS has better performance advantages compared to OFDM over the delay-Doppler channels. Furthermore, the proposed algorithm consistently outperforms the linear MMSE algorithm, MRC algorithm, and MP algorithm (No damping case). In particular, the conventional MP algorithm exhibits slow convergence without damping, while the

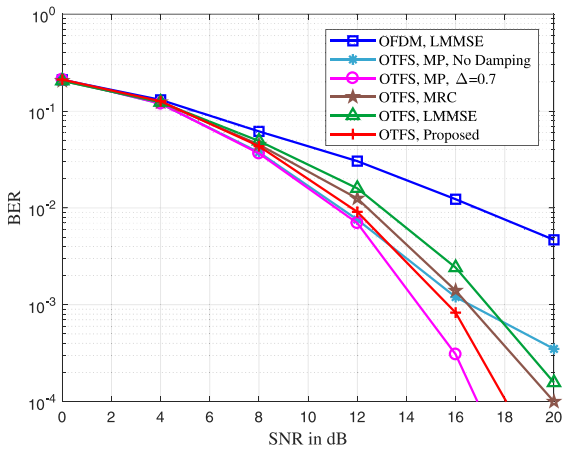

Fig. 4. BER performance of the proposed OTFS equalization algorithm, and compare with different algorithms.

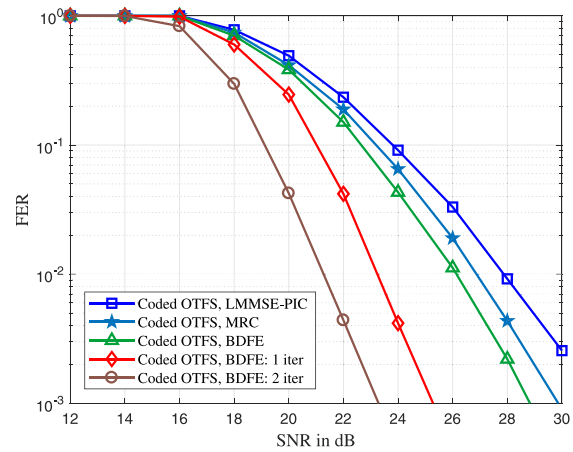

Fig. 5. FER performance of turbo equalization with different iterations, and compare with other coded schemes.

proposed algorithm still shows substantial convergence. In addition, the BER performance of the proposed algorithm is slightly higher as compared to the MP algorithm with the optimal damping factor $\Delta = 0.7$. However, the optimal damping factor is difficult to find for the conventional MP algorithm. Taken together, the OTFS performance under the proposed algorithm is robust to Doppler effects. Notably, the proposed algorithm is a preferable compromise in comparing LMMSE algorithm and MP algorithm.

The frame error rate (FER) performance of coded OTFS with rectangular pulses using iterative soft-decision feedback turbo equalization is shown in Fig. 5. In this experiment, the input bits are coded by a systematic convolutional code, using a rate $R_c = 1/2$ with the generator polynomial $G = [5, 7]_8$. Obviously, the proposed coded OTFS scheme outperforms the conventional linear minimum mean squared error based parallel interference cancellation (LMMSE-PIC) [19] and MRC coded schemes. Furthermore, a significant enhancement in performance is observed by the a priori soft symbol with increasing iterations in the figure. In particular, a substantial FER performance gain with increasing number of iterations, that is, the performance gain of approximately 5.8 dB is improved from the first iteration to the third iteration at the FER level of 10^{-3}. We noted an impressive performance gain compared with BDFE, suggesting that significant FER performance in underwater acoustic communication scenarios can be achieved using the BDFE in combination with iterative coded OTFS.

Since the proposed algorithm is based on the channel matrix structure, the bandwidth size $N(L+1)$ of the channel matrix may affect the performance of the proposed algorithm. In the next experiments, the performance of the aforementioned BDFE algorithm is explored for different N values. In Fig. 6, four different N values: $N = 4$ $M = 256$, $N = 8$ $M = 128$, $N = 16$ $M = 64$, $N = 32$ $M = 32$ are set. We can observe that the proposed algorithm outperforms the conventional LMMSE algorithm for different N. In particular, with the increase of N, the performance of the proposed algorithm is the same for the uncoded OTFS system, which further shows that the proposed algorithm still exhibits excellent performance under different channel matrix bandwidths. Therefore, a conclusion can be made that the proposed algorithm still has significant performance for channel matrices with different N values.

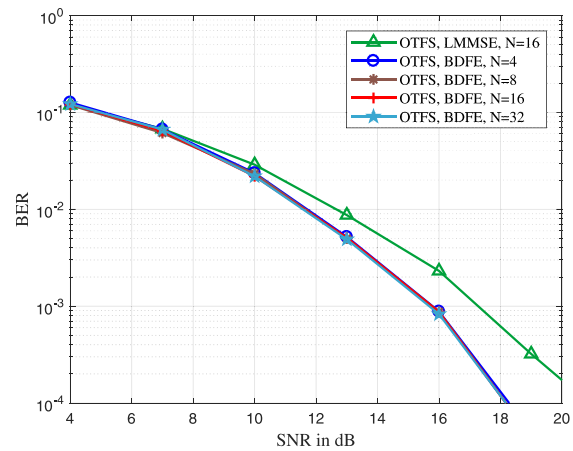

Fig. 6. BER performance of the proposed algorithm for different N values.

5. Conclusions

A novel BDFE turbo receiver for OTFS transmission over delay-Doppler channels is proposed. Firstly, a block decision feedback equalization is designed for joint interference and symbol detection, relying on the LDL^H factorization to reduce complexity and takes advantage of the band structure of the equivalent channel matrix. The various interference can be eliminated in the block decision feedback algorithm using appropriate feedforward. On the other hand, the residual IDI from the adjacent submatrix can be mitigated using the soft decision feedback filter. The proposed scheme effectively compensates for a wide range-Doppler spread. Additionally, the BDFE performance is improved using turbo equalization for the coded OTFS system. Simulation results demonstrate that the proposed scheme can achieve better BER performance and lower complexity as compared to the conventional LMMSE algorithm. Collectively, the proposed scheme lays the foundation for OTFS in practical underwater acoustic communications.

CRediT authorship contribution statement

Yang Zhang: Conceptualization, Methodology, Software, Writing – original draft, Writing – review & editing. **Qunfei Zhang:** Conceptualization, Supervision. **Chengbing He:** Supervision, Writing – review & editing, Validation. **Yi Zhou:** Software, Investigation. **Lianyou Jing:** Supervision.

Declaration of competing interest

The authors declare that they have no known competing financial interests or personal relationships that could have appeared to influence the work reported in this paper.

Acknowledgments

This work was supported by the National Natural Science Foundation of China under Grant 62071383, 61801079 and 61771396, and the Science Technology and Innovation Commission of Shenzhen Municipality (Grant No. JCYJ20180306170932431).

References

[1] X. Zhuo, M. Liu, Y. Wei, G. Yu, F. Qu, R. Sun, AUV-aided energy-efficient data collection in underwater acoustic sensor networks, IEEE Internet Things J. 7 (10) (2020) 10010–10022.
[2] L. Ma, H. Jia, S. Liu, I.U. Khan, Low-complexity doppler compensation algorithm for underwater acoustic OFDM systems with nonuniform doppler shifts, IEEE Commun. Lett. 24 (9) (2020) 2051–2054.
[3] Z. Wei, W. Yuan, S. Li, J. Yuan, G. Bharatula, R. Hadani, L. Hanzo, Orthogonal time-frequency space modulation: A full-diversity next generation waveform, 2020, arXiv preprint arXiv:2010.03344.
[4] R. Hadani, S. Rakib, M. Tsatsanis, A. Monk, A.J. Goldsmith, A.F. Molisch, R. Calderbank, Orthogonal time frequency space modulation, in: 2017 IEEE Wireless Communications and Networking Conference, WCNC, IEEE, 2017, pp. 1–6.
[5] R. Hadani, A. Monk, OTFS: A new generation of modulation addressing the challenges of 5G, 2018, arXiv preprint arXiv:1802.02623.
[6] P. Raviteja, K.T. Phan, Y. Hong, E. Viterbo, Interference cancellation and iterative detection for orthogonal time frequency space modulation, IEEE Trans. Wireless Commun. 17 (10) (2018) 6501–6515.
[7] P. Raviteja, K.T. Phan, Q. Jin, Y. Hong, E. Viterbo, Low-complexity iterative detection for orthogonal time frequency space modulation, in: 2018 IEEE Wireless Communications and Networking Conference, WCNC, 2018, pp. 1–6, http://dx.doi.org/10.1109/WCNC.2018.8377159.
[8] W. Yuan, Z. Wei, J. Yuan, D.W.K. Ng, A simple variational Bayes detector for orthogonal time frequency space (OTFS) modulation, IEEE Trans. Veh. Technol. 69 (7) (2020) 7976–7980.
[9] Z. Yuan, F. Liu, W. Yuan, Q. Guo, Z. Wang, J. Yuan, Iterative detection for orthogonal time frequency space modulation with unitary approximate message passing, IEEE Trans. Wireless Commun. (2021).
[10] L. Li, Y. Liang, P. Fan, Y. Guan, Low complexity detection algorithms for OTFS under rapidly time-varying channel, in: 2019 IEEE 89th Vehicular Technology Conference, VTC2019-Spring, IEEE, 2019, pp. 1–5.
[11] X. Xu, M.-M. Zhao, M. Lei, M.-J. Zhao, A damped GAMP detection algorithm for OTFS system based on deep learning, in: 2020 IEEE 92nd Vehicular Technology Conference, VTC2020-Fall, IEEE, 2020, pp. 1–5.
[12] K.R. Murali, A. Chockalingam, On OTFS modulation for high-Doppler fading channels, in: 2018 Information Theory and Applications Workshop, ITA, IEEE, 2018, pp. 1–10.
[13] G.D. Surabhi, A. Chockalingam, Low-complexity linear equalization for OTFS modulation, IEEE Commun. Lett. 24 (2) (2019) 330–334.
[14] J. Cheng, H. Gao, W. Xu, Z. Bie, Y. Lu, Low-complexity linear equalizers for OTFS exploiting two-dimensional fast Fourier transform, 2019, arXiv preprint arXiv:1909.00524.
[15] P. Raviteja, K.T. Phan, Y. Hong, Embedded pilot-aided channel estimation for OTFS in delay–Doppler channels, IEEE Trans. Veh. Technol. 68 (5) (2019) 4906–4917.
[16] P. Raviteja, Y. Hong, E. Viterbo, E. Biglieri, Practical pulse-shaping waveforms for reduced-cyclic-prefix OTFS, IEEE Trans. Veh. Technol. 68 (1) (2018) 957–961.
[17] T. Zou, W. Xu, H. Gao, Z. Bie, Z. Feng, Z. Ding, Low-complexity linear equalization for OTFS systems with rectangular waveforms, in: 2021 IEEE International Conference on Communications Workshops, ICC Workshops, IEEE, 2021, pp. 1–6.
[18] S. Tiwari, S.S. Das, V. Rangamgari, Low complexity LMMSE receiver for OTFS, IEEE Commun. Lett. 23 (12) (2019) 2205–2209.
[19] F. Long, K. Niu, C. Dong, J. Lin, Low complexity iterative LMMSE-PIC equalizer for OTFS, in: ICC 2019-2019 IEEE International Conference on Communications, ICC, IEEE, 2019, pp. 1–6.
[20] T. Thaj, E. Viterbo, Low complexity iterative rake decision feedback equalizer for zero-padded OTFS systems, IEEE Trans. Veh. Technol. 69 (12) (2020) 15606–15622.
[21] L. Jing, H. Wang, C. He, Y. Zhang, H. Yin, Two dimensional adaptive multichannel decision feedback equalization for OTFS system, IEEE Commun. Lett. 25 (3) (2020) 840–844.
[22] J. Han, L. Zhang, Q. Zhang, G. Leus, Low-complexity equalization of orthogonal signal-division multiplexing in doubly-selective channels, IEEE Trans. Signal Process. 67 (4) (2018) 915–929.
[23] J. Hagenauer, E. Offer, L. Papke, Iterative decoding of binary block and convolutional codes, IEEE Trans. Inform. Theory 42 (2) (1996) 429–445.
[24] J. Wu, Y.R. Zheng, Low complexity soft-input soft-output block decision feedback equalization, IEEE J. Sel. Areas Commun. 26 (2) (2008) 281–289.
[25] M. Tuchler, A.C. Singer, R. Koetter, Minimum mean squared error equalization using a priori information1, IEEE Trans. Signal Process. 50 (3) (2002) 673–683.

Yang Zhang: is currently pursuing the Ph.D. degree with the School of Marine Science and Technology, Northwestern Polytechnical University, Xi'an, China. His research interests include underwater communications and machine learning.

Qunfei Zhang: received the B.Sc. degree in electrical engineering and the M.S. degree in signal and information processing from Northwestern Polytechnical University, Xi'an, China, in 1990 and 1993, respectively, and the Ph.D. degree in signal and information processing from Xidian University, Xi'an, China, in 2003.

He is currently a Professor at the School of Marine Science and Technology, Northwestern Polytechnical University. His research interests include spectral estimation, array signal processing, underwater communications, and networking.

Chengbing He: received the B.S., M.S., and Ph.D. degrees in the electronic and communications engineering from the School of Marine Science and Technology, Northwestern Polytechnical University (NPU), Shaanxi, China, in 2003, 2006, and 2009, respectively. He has been a Faculty Member of NPU since then and is currently a Professor. His current research interest includes underwater acoustic communications.

Yi Zhou: received the M.S. degree from Yanshan University, Hebei, China. She is currently pursuing the Ph.D. degree with the School of Marine Science and Technology, Northwestern Polytechnical University, Xi'an. Her research interests include underwater acoustic networks and machine learning.

Lianyou Jing: received the B.S., M.S., and Ph.D. degrees in electronic and communications engineering from the School of Marine Science and Technology, Northwestern Polytechnical University (NPU), Shaanxi, China, in 2010, 2013, and 2017, respectively. He is currently a Faculty Member with the School of Information and Communication Engineering, Dalian University of Technology. His current research interest includes underwater acoustic communications.